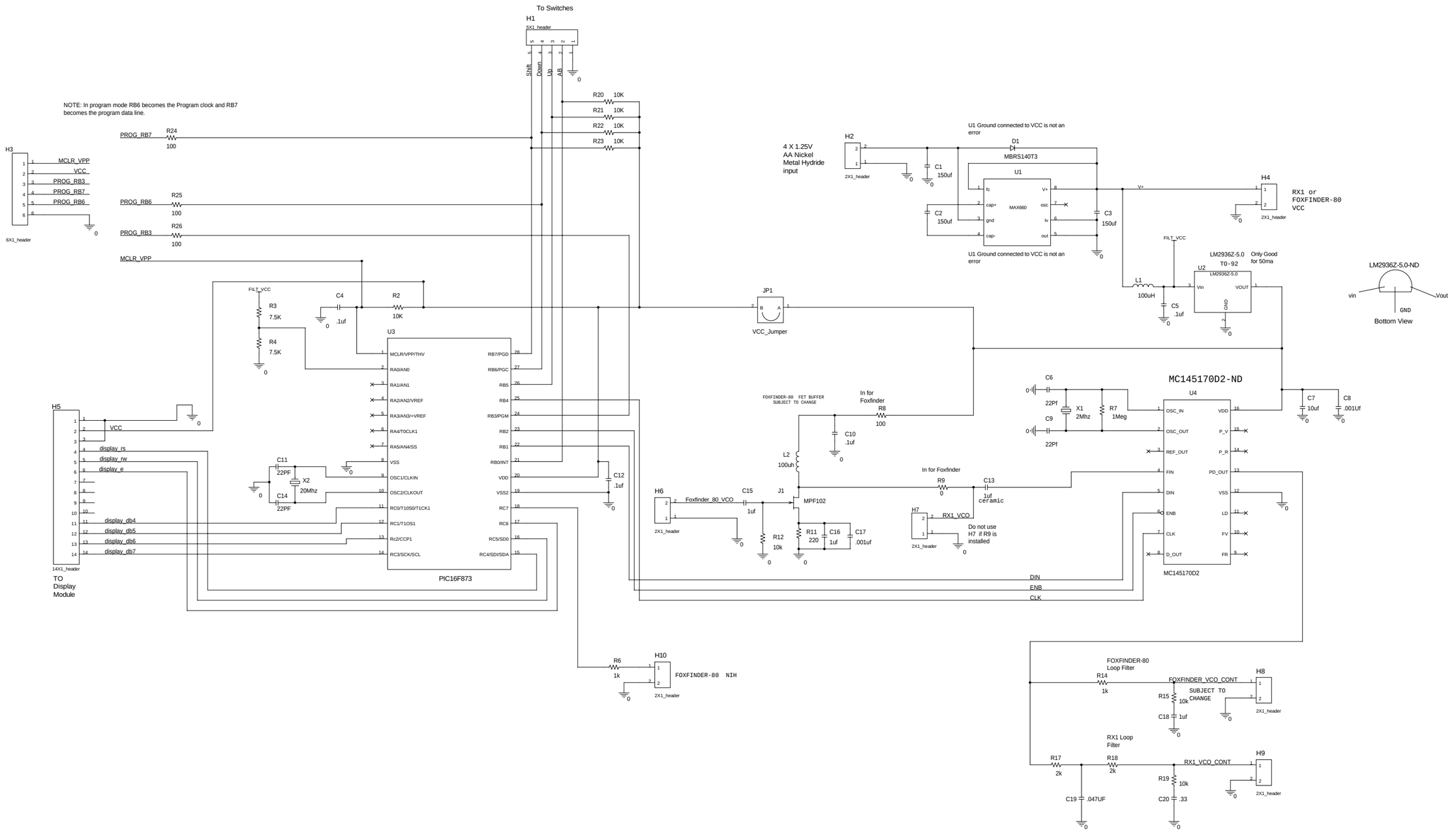

Title	OZ MOD Version 3.0	
Size D	Document Number 000001	Rev 1.1
Date: Friday, January 02, 2004	Sheet 1 of 1	