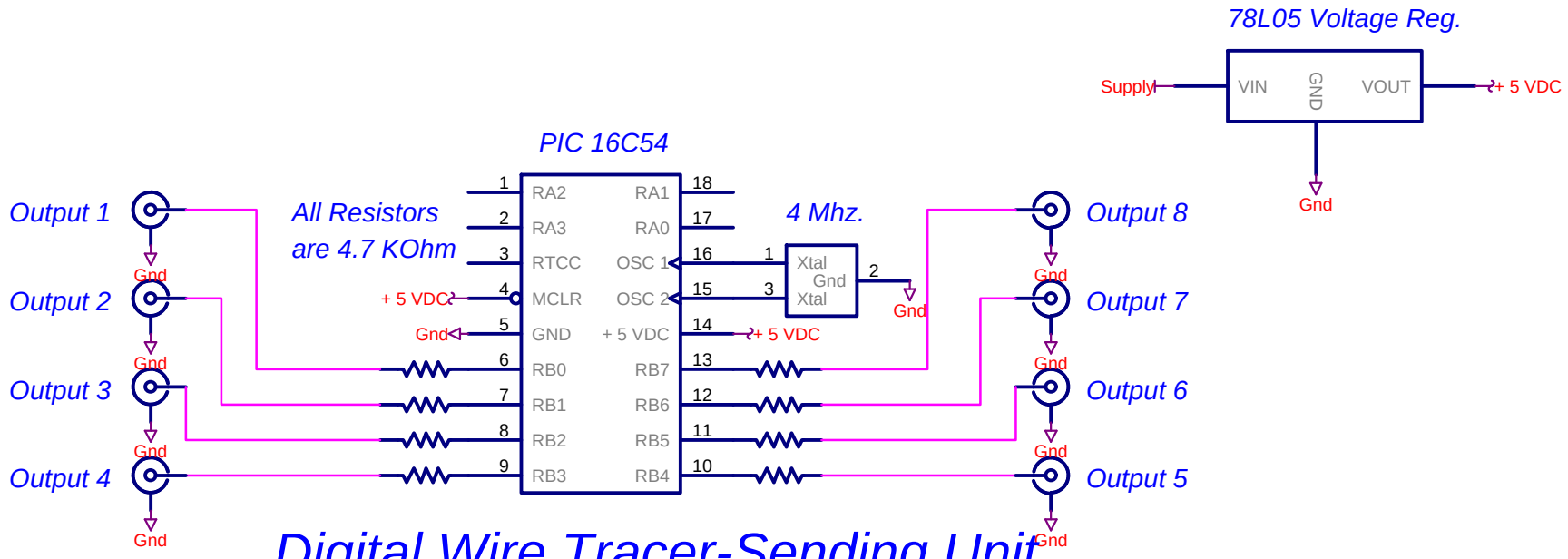

Digital Wire Tracer-Sending Unit

Copyright (c) 1999

Dennis Shepard/Shepard Engineering Concepts